Telehandler

Regulatory area: NA

TF45.11

MERLO

Gallery

Comfort: The best workplace

Exclusive comfort

An unprecedented design guarantees maximum functionality and comfort; grouping the information provided to the driver and the controls of the various systems and devices for optimal ergonomics. The reverse shuttle on the steering wheel is also present on the joystick.

Cab entry

To ensure simple and easy access to the cab, the door of Merlo telehandlers can be opened by up to 180°. In addition, the inside of the door is equipped with a large handrail to help the operator when getting inside and outside of the cab.

Air-conditioning

Developed according to automotive standards, cutting the warm-up and cool-down times in half compared to a conventional air conditioning system. The inlet vent is placed on the side of the cab, away from potential sources of dust and dirt, while inside there are 8 vents.

Efficiency: Simpler and smarter

Transmission

In order to ensure a reduction in consumption and operating costs, Merlo telescopic handlers boast full electronic management of the transmission and engine, in order to minimise RPM and, consequently, fuel demand.

Steering Modes

The axles ensure the maximum steering angle to perform manoeuvres in tight spaces. Additionally, the operator can manage the steering of the machine with three different options according to the specific needs of the job.

Visibility

Merlo's improved visibility increases range of movement and safety for operators.

Performance: Everything at your fingertips

Transmission

The Merlo telehandlers have excellent braking capacity when the accelerator pedal is released, guaranteeing high torque to the wheels during material handling and transfers, as well as millimetric precision of movements when positioning the load.

Engines

All models feature a combustion engine in an original Merlo mounting layout, developed by Merlo with the invention of the panoramic visibility models, ensuring maximum accessibility to components in case of programmed and/or extraordinary maintenance.

Axles

The exclusively designed axles are manufactured and developed in-house by Merlo, and can be equipped with differential lock to ensure traction on any terrain, regardless of how unstable.

Safety: Not just feelings

Active safety

In order to remain fully compliant with regulations in frontal tipping prevention, Merlo handlers are equipped with features developed specifically to keep the operator safe from frontal tipping, without sacrificing performance, particularly of boom speed and lifting capacity.

Aerial work platform

The Merlo telehandlers can be configured with aerial work platform. This solution, complying with EN280 standard, assures an increased level of active and passive safety during work at heights, and enhances machine versatility.

Certified cab

All Merlo telehandlers have a metal structure above the glass roof on the outside of the cab to comply fully with FOPS Level II standard, the most stringent certification level in protecting the operator from falling objects.

Hotspot

1 - ASCS	The ASCS safety system: the ideal assistant! The system adjusts the speed and maximum extent of the movements based on the attachments in use, the load being handled and its position, thus eliminating the risk of overturning. Standard on the entire range with LS hydraulic system.
2 - EPD ECO POWER DRIVE	Maximum savings and efficiency! The Merlo-patented EPD system electronically controls engine and transmission. It manages engine speed, hydrostatic pump flow rate, and hydrostatic drive displacement, maximising efficiency and reducing RPM, saving up to 18% in fuel consumption.
3 - BOOM SUSPENSION	Load protected in all conditions? Of course! Thanks to the active boom suspension (BSS technology). Precision and power guaranteed thanks to automatic deactivation below 3 km/h.

PERFORMANCE AND FEATURES	TF45.11T-170-HF	TF45.11TCS-170-CVTRONIC-HF	TF45.11TCS-170-HF
Performance			
Unladen weight (lb)	22707	22818	22707
Maximum load capacity (lb)	9900	9900	9900
Lift height (ft)	34' 5''	34' 5''	34' 5''
Maximum reach (ft)	23' 1''	23' 1''	23' 1''
Lift height at max. load capacity (ft)	29' 5''	29' 5''	29' 5''
Reach at max. load capacity (ft)	6' 0''	6' 0''	6' 0''
Load capacity at max. lift height (ft)	7000	7000	7000
Load capacity at max. reach (lb)	1300	1300	1300
Boom side-shift (in)	—	—	—
Frame levelling (%)	+/-8	+/-8	+/-8
Boom section	3	3	3
Powertrain			
Engine	FPT NEF45	FPT NEF45	FPT NEF45
Range/Cylinders	4500/4	4500/4	4500/4
Engine power (kW/HP)	125/170	125/170	125/170
Anti-pollution technology	Stage V - SCR+DPF+DOC	Stage V - SCR+DPF+DOC	Stage V - SCR+DPF+DOC
Reversible Fan	○	○	○
Maximum speed (mph)	25	25	25
Fuel tank capacity (gal)	37	37	37
AdBlue tank capacity (gal)	4.8	4.8	4.8
Hydrostatic transmission	●	CVTronic	●
EPD	PLUS	PLUS	PLUS
Electronic joystick	STD	STD	STD
Axles	Axial	Axial	Axial
Reducers	Epicyclic	Epicyclic	Epicyclic
Brakes	Dry discs	Dry discs	Dry discs
Automatic parking brake	●	●	●
Hydraulic			
Hydraulic pump	HF	HF	HF
Delivery / pressure (bar-l/min)	42,3 - 3626	42,3 - 3626	42,3 - 3626
Hydraulic oil tank capacity (gal)	26.4	26.4	26.4
Auxiliary hydraulic service on boom	●	●	●
Rear service line	○	○	○
Cab			
Cab finishing	PREMIUM	PREMIUM	PREMIUM
ASCS	Completo	Completo	Completo
FOPS II Cab	●	●	●
ROPS Cab	●	●	●
Controls	Electronic joystick control	Electronic joystick control	Electronic joystick control
Tilting cab	—	—	—
Reverse shuttle	Dual reverse	Dual reverse	Dual reverse
Configuration			
Hydropneumatic Suspension CS Merlo	●	●	●
Hydropneumatic Suspension BSS Merlo	●	●	●
Hydropneumatic Suspension EAS Merlo	—	—	—
Work lights on cab	●	●	●
Sun-shade in the cab	●	●	●
Tac-lock	●	●	●
Pre-arrangement for aerial work platform	○	○	○
Two floating forks	●	●	●
Pedal Inching-Control	●	●	●
Permanent four-wheel drive	●	●	●
All wheel steering	●	●	●
Three steering way	●	●	●
Standard tyres	500/70-24”	500/70-24”	500/70-24”
OPT tyres	600/55-26.5; 17.5-25	600/55-26.5; 17.5-25	600/55-26.5; 17.5-25
Hydraulically controlled stabilizers	—	—	—
Turret rotation	—	—	—
Tractor type approval	○	○	○
Pneumatic brakes (ton)	○	○	○
Hydraulic brakes (ton)	○	○	○
PTO	—	—	—

— not available
● standard
○ optional

Dimensions

	TF45.11T-170-HF	TF45.11TCS-170-CVTRONIC-HF	TF45.11TCS-170-HF
A - Lenght	198	198	198
C - Wheelbase	120	120	120
F - Ground clearence	17	17	17
H - Width	94	94	94
M - Cabin width	40	40	40
P - Height		102	102
R - Turning radius at wheels	151	151	151
S - Turning radius at forks	189	189	189

Technical Details

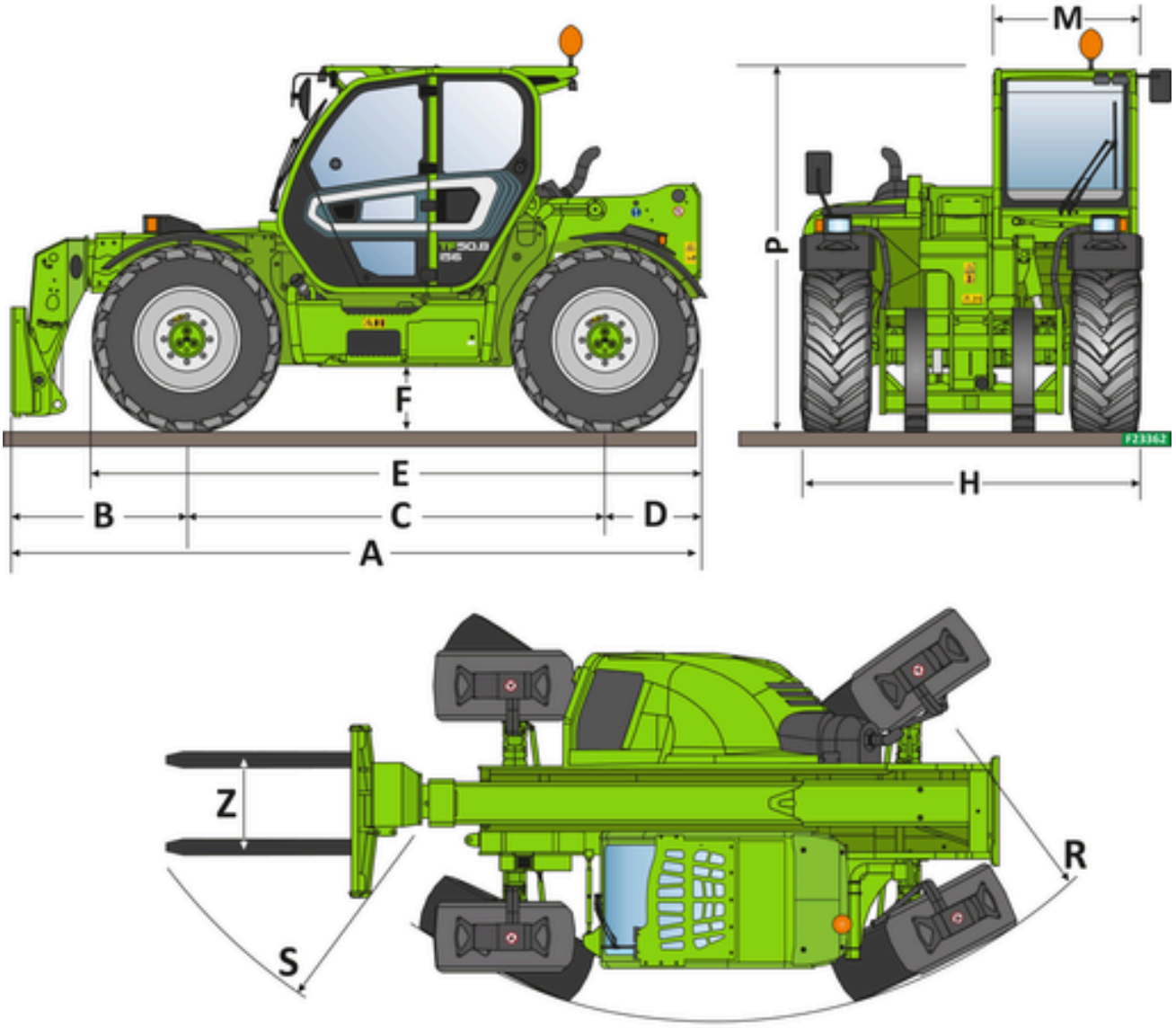

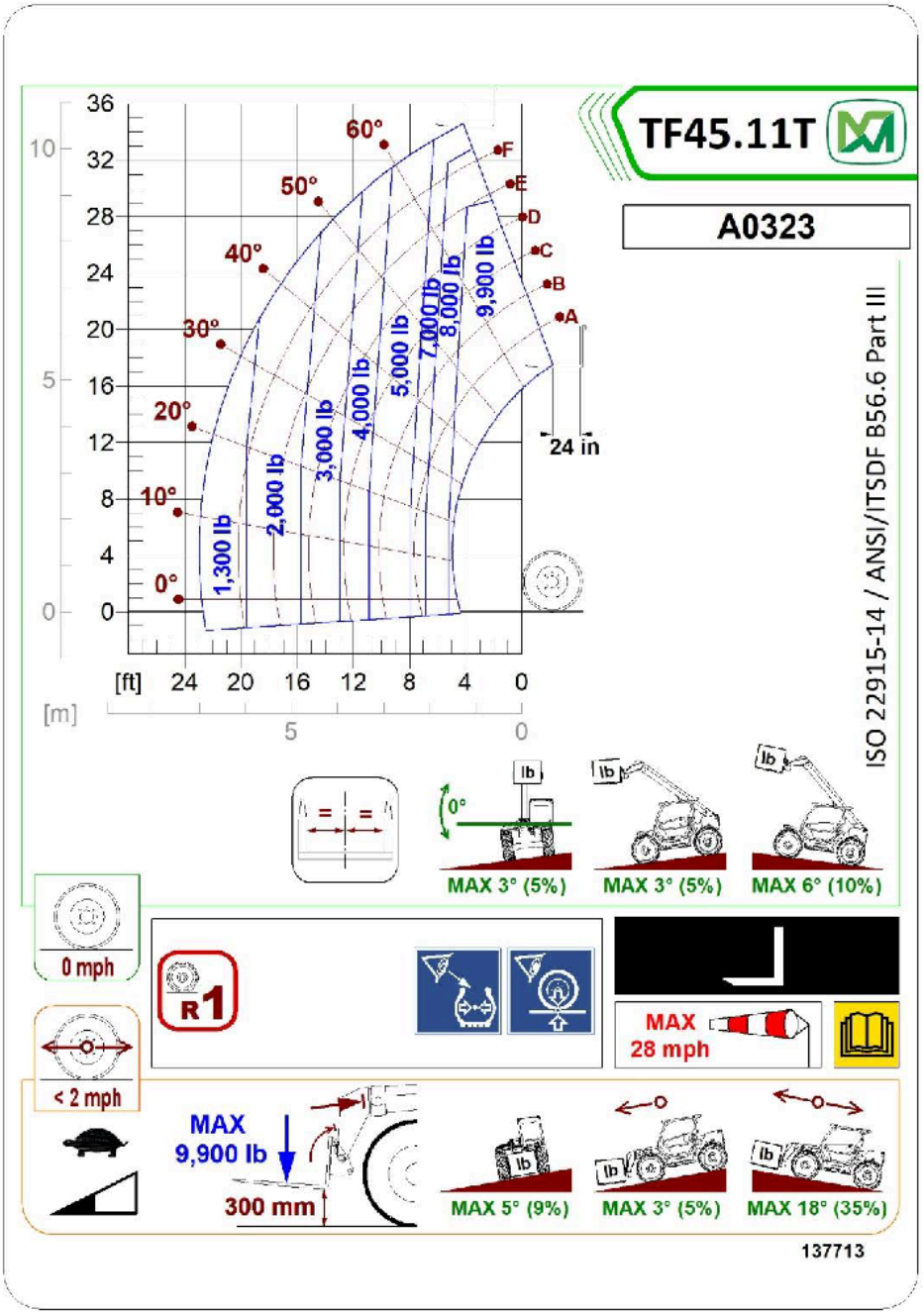
TF45.11T
A0323
ISO 22915-14 / ANSI/ITSDF B56.6 Part III
60°
50°
40°
30°
20°
10°
0°
F
E
D
C
B
A
1,300 lb
2,000 lb
3,000 lb
4,000 lb
5,000 lb
7,000 lb
8,000 lb
9,900 lb
24 in
[ft]
[m]
MAX 3° (5%)
MAX 3° (5%)
MAX 6° (10%)
0 mph
R1
MAX
28 mph
< 2 mph
MAX
9,900 lb
300 mm
MAX 5° (9%)
MAX 3° (5%)
MAX 18° (35%)
137713

Your Merlo dealer

MERLO S.P.A.
Via Nazionale, 9
12010 S. Defendente di Cervasca,
(Cuneo) Italia
Tel. +39 0171 614111

info@merlo.com
www.merlo.com

MERLO